CPSC 481
Artificial Intelligence

Chuck Chekuri
cchekuri@fullerton.edu

CChekuri

AI 481.07

What we will cover today

- Introductions
- What is Artificial Intelligence?
- History of AI
- Some questions
- Course Outline

A bit about myself

Professor
Computer Science Department

Professional Interests

- Generative AI
  - AI Agents
  - Responsible AI
- Entrepreneurship
  - Building teams
  - Creating Value
- Product Development
  - Software Engineering
  - Cloud Computing

A bit about yourself?

- In next 5 minutes:
  - Form groups of 3 students
  - Introduce yourselves to each other
  - Learn your partner's name
  - What they have heard of AI
  - Anything else they would like to share
- When everyone is done
  - Introduce your new friends to the class

Chart Your Course

TECHNOLOGY

The underlying technology that powers AI—what makes it work and how it's advancing.

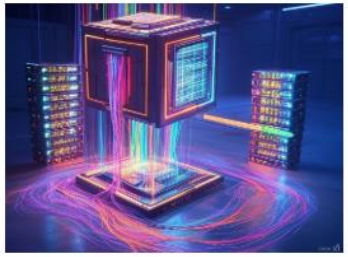

Model Training

Pushing intelligence, scale, efficiency, and performance.

Model Inference

Pushing access, costs and reach.

APPLICATION

The real-world applications of AI—what value it delivers and where it makes a difference.

Physical

Pushing biomimetic designs, materials and safety

Digital

Pushing Context, Deployment models regulations and latency

https://framework.axiomaticinfo.com

Thinking and Reasoning

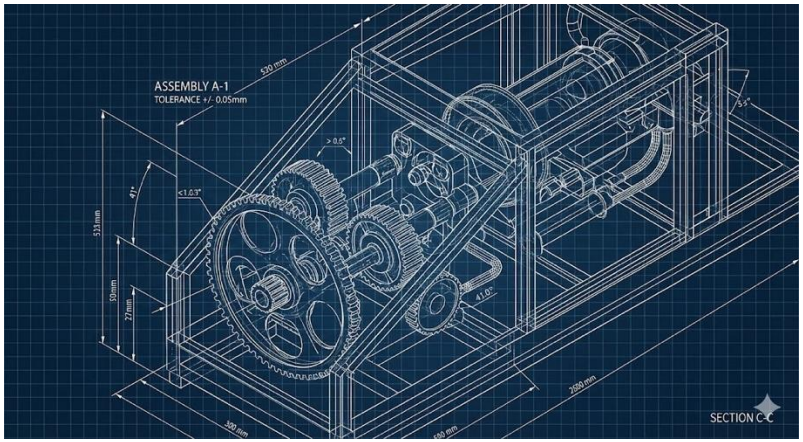

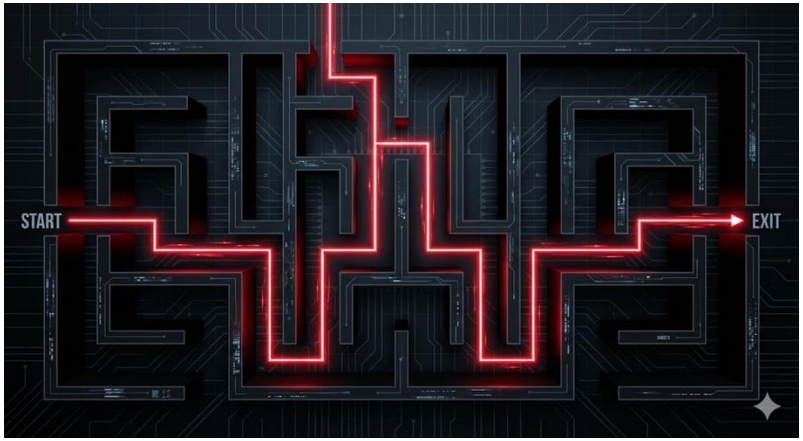

Thinking and Reasoning

Feature	Thinking (Intuition/Association)	Reasoning (Logic/Deduction)
Core Mechanism	**Pattern Matching:** Relies on statistical correlations and high-dimensional vector proximity.	**Symbolic Manipulation:** Relies on logical steps, causality, and rules ($If \ A \ then \ B$).
CS Analogy	**Neural Network Inference:** A forward pass generating the most likely next token.	**Algorithm Execution:** A step-by-step process (e.g., Chain-of-Thought) validating intermediate states.
Speed	**Fast:** Parallel processing, $O(1)$ complexity relative to depth of thought.	**Slow:** Sequential processing, $O(n)$ or exponential complexity depending on search depth.
Error Mode	**Hallucination:** Plausible-sounding but factually incorrect nonsense.	**Fallacy:** A logic error where the conclusion does not strictly follow the premises.
Use Case	Creative writing, summarizing, sentiment analysis, image generation.	Math proofs, code debugging, planning, complex constraint satisfaction.

Knowledge and Understanding

Knowledge in AI is essentially about storage and retrieval. It is the possession of facts, data, or correlations. A massive database or a Large Language Model that has memorized the entire internet possesses immense knowledge. It can recall that 'Paris is the capital of France' or that 'pixel X is related to pixel Y'.

Understanding is a higher-order cognitive process. It involves grasping the relationships *between* pieces of knowledge, the context in which they apply, and the 'why' behind them. An AI that understands doesn't just recite facts; it can generalize to new situations, infer causal relationships, and reason about problems it hasn't seen before.

Knowledge is necessary for understanding, but knowledge alone is not understanding. We are currently very good at building AI with vast knowledge; the frontier of research is moving towards genuine understanding.

Deterministic and Probabilistic

Deterministic: A train is powerful and fast, but it has zero autonomy. It *must* follow the rails laid down by the engineer. If the rails end, the train crashes.
Algorithm (static intelligence)

Probabilistic: A Mars rover looks at the terrain and decides its own path, going around obstacles that weren't there when the map was made.
AI Agent (Dynamic Intelligence)

What is AI?

"The science and engineering of making intelligent machines"

- John McCarthy

"AI may be defined as the branch of computer science that is concerned with the automation of intelligent behavior"

- Luger

"The study and design of intelligent agents where an intelligent agent is a system that perceives its environment and takes actions that maximize its chances of success"

- Russell and Norvig

What is Intelligence?

- **No precise definition**
- **Some capabilities**
  - learning
  - recognition, understanding
  - reasoning
  - imagination (or abstract thinking)
  - creativity
  - communication
  - planning
  - decision making
  - problem solving

Turing Test

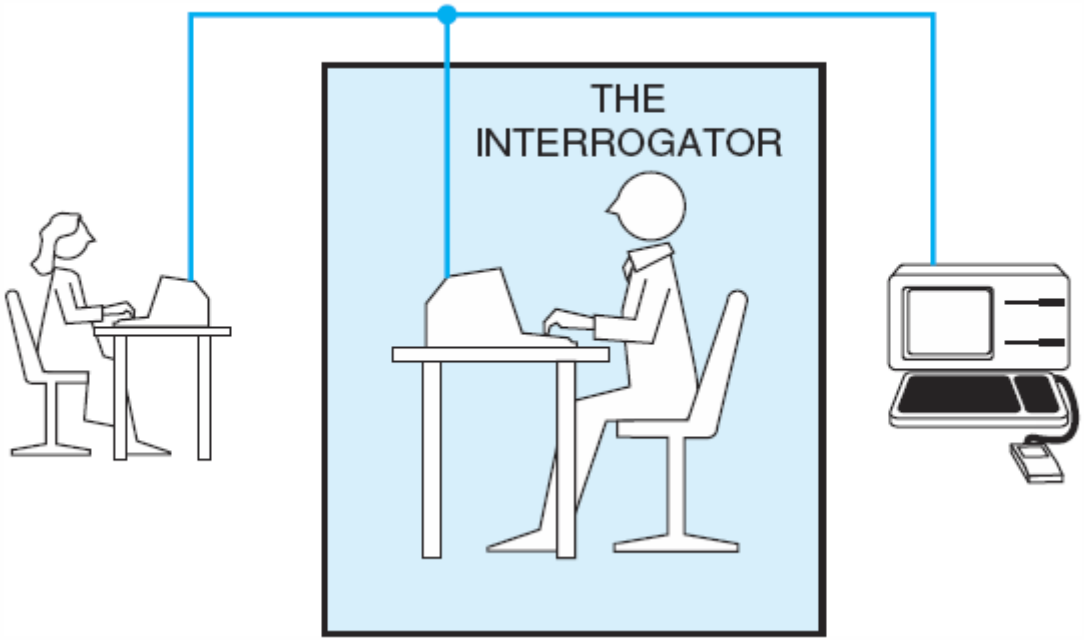

The Turing Test measures the performance of an intelligent machine against that of a human being through the imitation game.

Trying to determine which player – A or B – is a computer and which is a human

Can a system that passed a Turing Test be considered as intelligent as human?

Importance and Criticisms for Turing Test

- **Importance of Turing Test**
  - Attempts to give an objective notion of intelligence by eliminating any bias in favor of living organisms.
- **Criticisms of Turing Test**
  - Focuses on purely symbolic and problem-solving skills, not on perceptual skill.
  - A distraction to the important tasks such as developing general theories to explain the mechanisms of intelligence in human and machines to solve problems.
  - Only based on simulating human intelligence. Machine can do a lot better than human for many tasks.

What is AI?

"AI system means a machine-based system that is designed to operate with varying levels of autonomy and that can, for explicit or implicit objectives, generate output such as predictions, recommendations, or decisions influencing physical or virtual environments"

- Definition by the European Parliament as they work on the AI Act

The Evolution of Intelligence

The Philosophical Era

For decades, intelligence was defined by IQ tests, linguistic ability, and abstract reasoning (Philosophy & Psychology).

The Commodity Era

With Generative AI, intelligence is now a packaged utility. You can "buy" tokens of reasoning via API.

The Engineering Gap

Without a working definition, building autonomous agents is inefficient. We need a "Units of Measure" approach.

The New Paradigm

Intelligence is not "being human"—it is the **decision quality**. (efficiency of choice)

The Decision-Quality Framework

"Intelligence is the measure of Decision Quality."

Knowledge

The exhaustive list of all possible choices available to an agent.

The Decision

The act of selecting one choice from that list.

The Quality

How well that choice achieves a specific goal (Objective Function).

The Scale

As the number of choices grows from dozens to millions, the "Intelligence" required to find the *optimal* choice increases.

Static vs. Dynamic Intelligence

"The Mechanics of Finding the Right Choice"

Feature	Static Intelligence (Algorithms)	Dynamic Intelligence (Deep Learning)
Logic	Fixed rules and heuristics (A Priori).	Emergent patterns and weights.
Flexibility	Great for structured, predictable paths.	Necessary for high-dimensional, noisy data.
Analogy	A GPS calculating the shortest path.	A driver navigating based on "feel" and vision.
Role in Agents	Provides the guardrails and constraints.	Provides the "intuition" and adaptability.

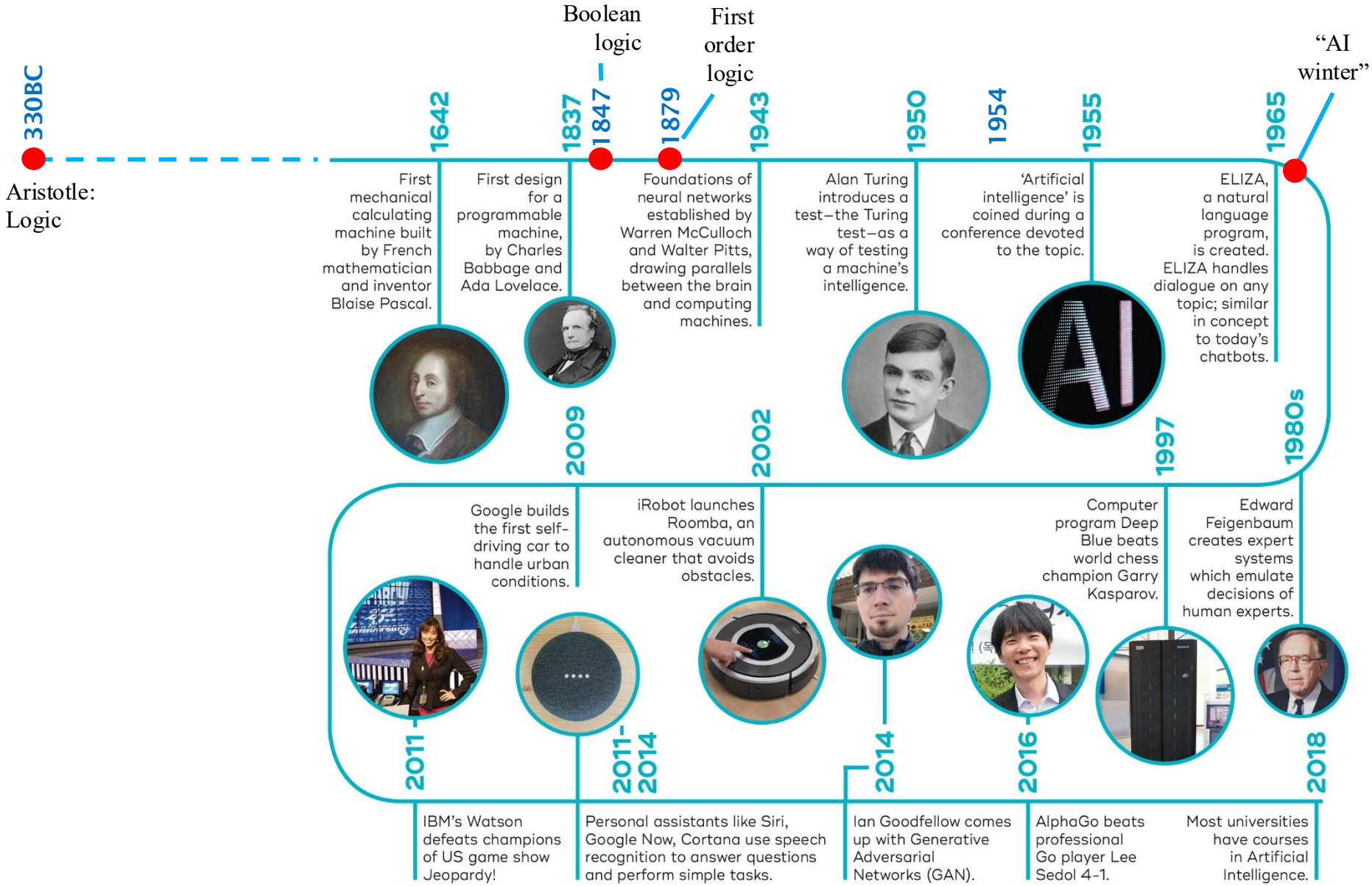

https://qbi.uq.edu.au/files/40697/The-Brain-Intelligent-Machines-AI-timeline.jpg

History

- 1950 Claude Shannon's "Programming a Computer for Playing Chess" is the first published article on developing a chess-playing computer program.
- 1950 **Alan Turing** publishes "Computing Machinery and Intelligence" in which he proposes "the imitation game" which will later become known as the "Turing Test."
- 1956 the First AI Conference at Dartmouth: A program that simulates the machine; How can a computer be programmed to use a language; Neuron networks; Self-improvement through learning and reasoning
- 1970 The first anthropomorphic robot, the WABOT-1, is built at Waseda University in Japan. It consisted of a limb-control system, a vision system and a conversation system.
- 1972 MYCIN, an early expert system for identifying bacteria causing severe infections and recommending antibiotics, is developed at Stanford University.
- 1997 **Deep Blue** becomes the first computer chess-playing program to beat a reigning world chess champion.

Terminology

AI: a field of study, a set of capabilities

AI system: a specific technology. e.g., ChatGPT

Machine Learning (ML): using historic data to make predictions

- ML can be considered an approach to achieve AI
- There are non-ML approaches to AI

Model: the "function" produced by an ML system

- Give a model some inputs and it generates an output: a prediction, a generated text/image

Directions of Artificial Intelligence

- Strong AI – AI with general intelligence
- Weak AI – AI with specific intelligent abilities

- Researchers started with the goal of strong AI but has achieved weak AI
  - *AI (robot or agent with AI) still weak at recognition, feeling, emotion*
  - **Strong AI** is still a long-term goal of AI research.

- From "Thinking humanly and acting humanly"
- To "Thinking rationally and acting rationally"

Use Cases of AI

- What are the major use cases of AI today?
  - Changing by the month.
  - As of Jan 2026
    - Healthcare: Cognitive Co-Pilots
    - Enterprise and Software Development
    - Energy and Infrastructure
    - Finance & Security
    - Creative and Media

AI-related roles in the industry

ROLE	RESPONSIBILITIES
Data Engineer	Makes the appropiate data available for data scientists; focuses on data integration, modelling, optimization, quality and self-service.
Data Scientist	Identifies use cases, determines appropriate datasets and algorithms, experiments and builds AI models.
AI Architect	Is the glue between data scientists, data engineers, developers, operations (DevOps, DatOps, MLOps) and business unit leaders to govern and scale the AI initiatives.
ML Engineer	Deploys AI models through effective scaling and ensuring production readiness, ensures continuous feedback loop.

Designing Agentic AI

”Intelligence in Practice"

How do we apply this to the **Agentic Design Lab**?

1.Define the Knowledge Space

What are all the possible actions your agent can take?

2.Select the Selection Engine

Will you use a static algorithm (if/then) or a dynamic model (history)?

3.Validate the Quality

How do we measure if the decision was "intelligent"?

- *Accuracy:* Did it solve the problem?
- *Efficiency:* Did it find the choice quickly with low compute?
- *Robustness:* Does it still make a high-quality choice if the environment changes?

3 Core Components

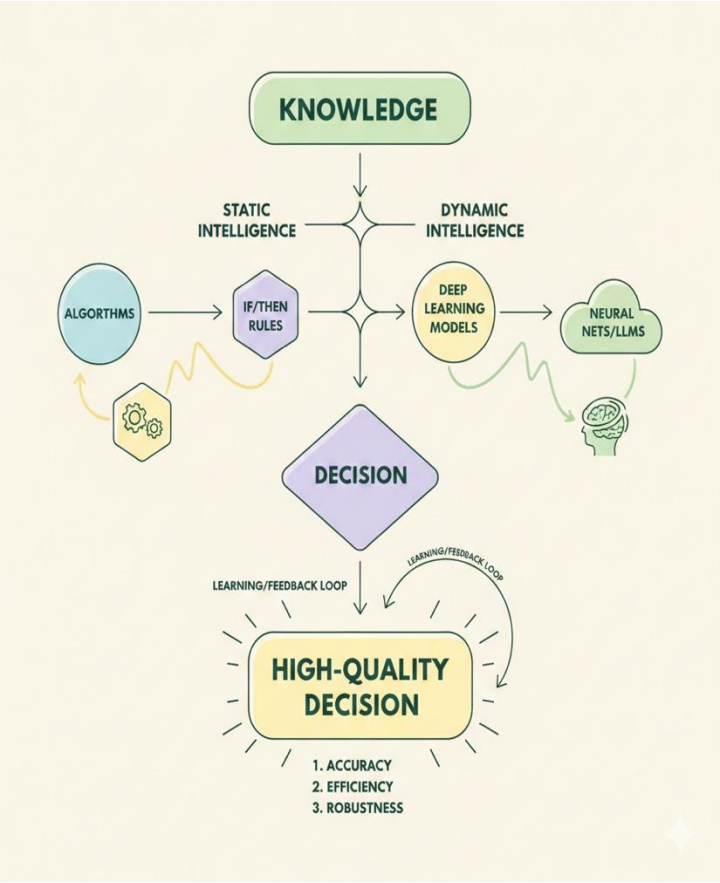

1. Intelligence Engine
2. Evaluation Method
3. Update/Learn

```
def agent_step(knowledge_space, objective):
    # 1. Filter Knowledge through Intelligence (Static
    or Dynamic) options =
    intelligence_engine.process(knowledge_space)

    # 2. Select the "Decision" with the highest
    predicted quality
    decision = max(options, key=lambda x:
    x.evaluate_quality(objective))

    # 3. Execute and learn from the result (Feedback
    Loop)
    feedback = execute(decision)
    intelligence_engine.update(feedback)
```

Questions About AI

- **Hard-coded or Learned?**
  - Should your agent follow a strict set of "if-then" rules (a priori), or should it adjust its behavior based on the data it sees?
- **Modular or Unified?**
  - Is your agent a single "brain," or a collection of specialized tools (one for searching, one for calculating, one for writing)?
- **Reflex or Reasoning?**
  - Does the agent react instantly to an input, or does it perform an "internal" thought process (like Chain-of-Thought) before acting?
- **Creative or Predictable?**
  - When the agent hits a roadblock, should it try something new or wait for a human to tell it what to do?
- **Autonomous or Controlled?**
  - Who is responsible for the outcome—the programmer who wrote the logic, or the agent that executed it?

Homework

- Groups of 4 students
  - Roles: Architect, Prompter, Validator, Documenter
- Discuss one of the questions

Sign Up

Instructions

Classwork

- On Google Drive
  - **Link on Canvas**
- Go to today's date and section
  - Editable and viewable by all
- Create a new Google Document and name it with your groupmates' names
  - E.g.: Garcia-Joshi-Nguyen
  - Write the names of your group members
  - Add your answers
- Will not be graded
- Can easily share with rest of class

AI 481.07

See Canvas page

SYLLABUS

References

- Russel and Norvig, Artificial Intelligence: A Modern Approach, 4th edition, Prentice Hall, 2021.
- Axiom Framework https://framework.axiomaticinfo.com